DEMOSAT HIGH ALTITUDE BALLOON PAYLOAD

ENCE 3210 FINAL

By Nicolas Ruth

PHASE 1

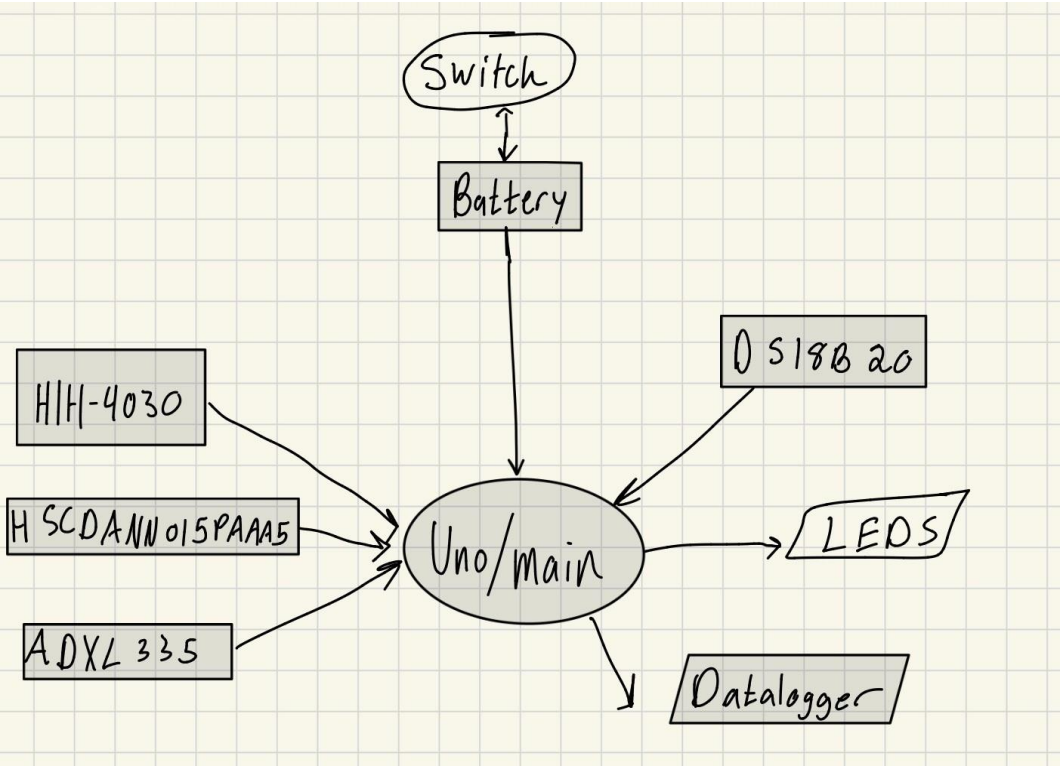

- Weight ~100g , Current ~ 90mA
- Feasibility- Not possible since the humidity and pressure sensors are out of production

REQUIREMENTS:

- Under 200g
- Under $147
- Uses less power than original design

PHASE 2

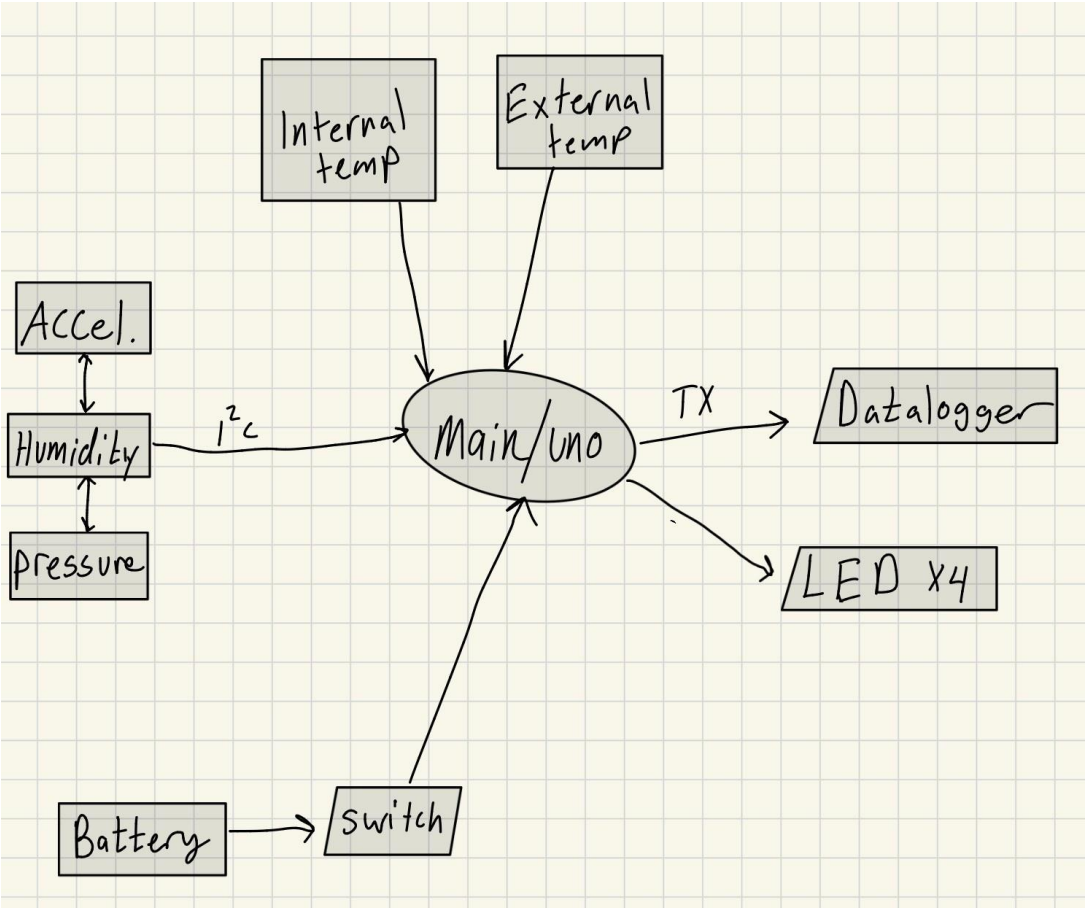
Internal temp
External temp
Accel.
Humidity
pressure
I²c
Main/uno
TX
Datalogger
LED x4
Battery
switch

ACCELEROMETER- ADXL345

(ORIGINAL SENSOR: ADXL335)

- Supports I2C
- Works with SDA/SCL
- Higher resolution at 13-bit
- Range up to +/- 16 g (opposed to +/-3)
- ~140 µA @ 3.3 V

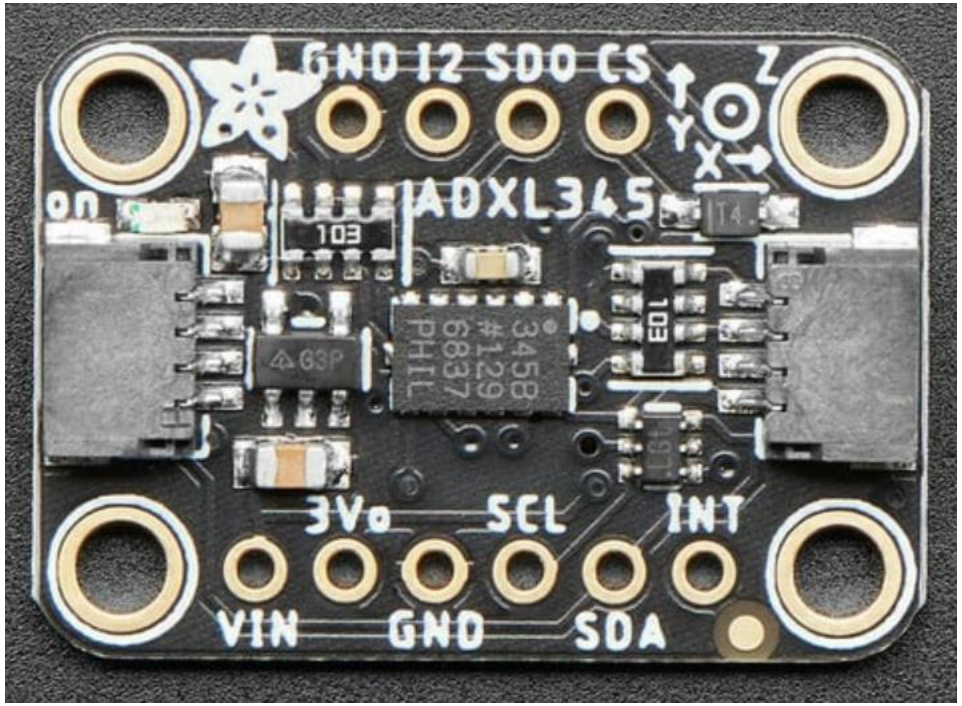

PRESSURE SENSOR- DPS310

(ORIGINAL SENSOR: HSCDANN015PAAA5)

- Supports I2C
- Pressure range about 300-1200hPa
- Runs on 1.7-3.6V (compared to 5V)
- Compact
- ~1.7 µA @ 3.3 V

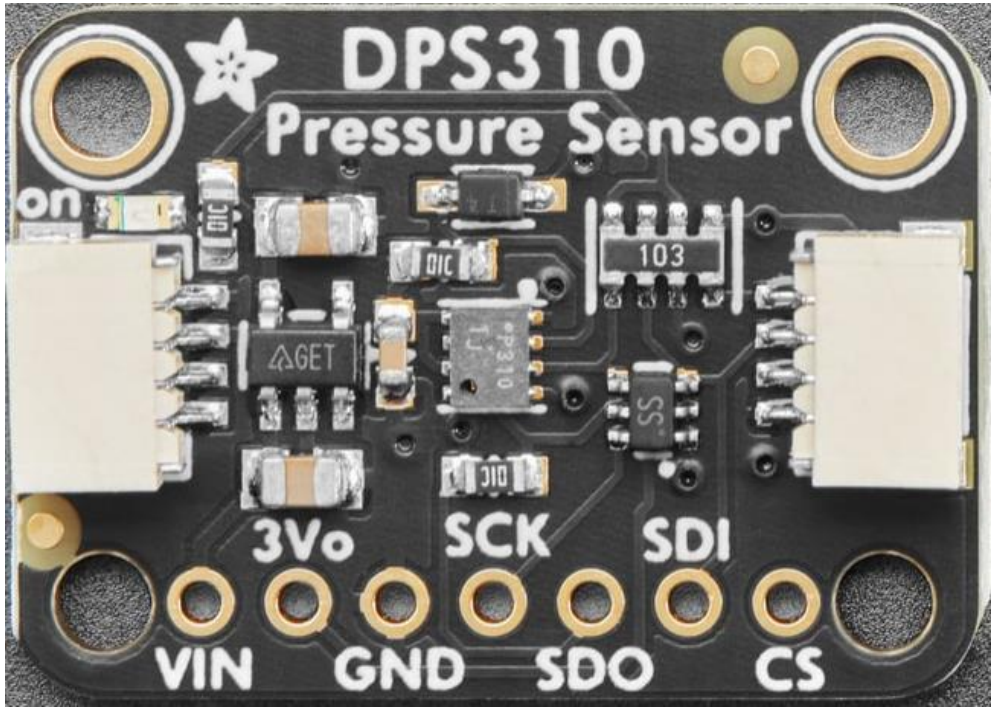

HUMIDITY SENSOR- HIH-9120-021-001

(ORIGINAL SENSOR: HIH-4030)

- Supports I2C
- Runs on 3.3V
- +/- 1.7% accuracy (compared to +/- 3.5%)
- Much smaller design
- ~565 μA @ 3.3 V

TEMPERATURE SENSOR- DS18B20

(ORIGINAL SENSOR: TMP36)

- Digital output rather than analog
- 9-12bit (compared to 10bit ADC limited)
- Accuracy: +/- 0.5 degrees C (compared to +/- 2)
- Waterproof design good for external

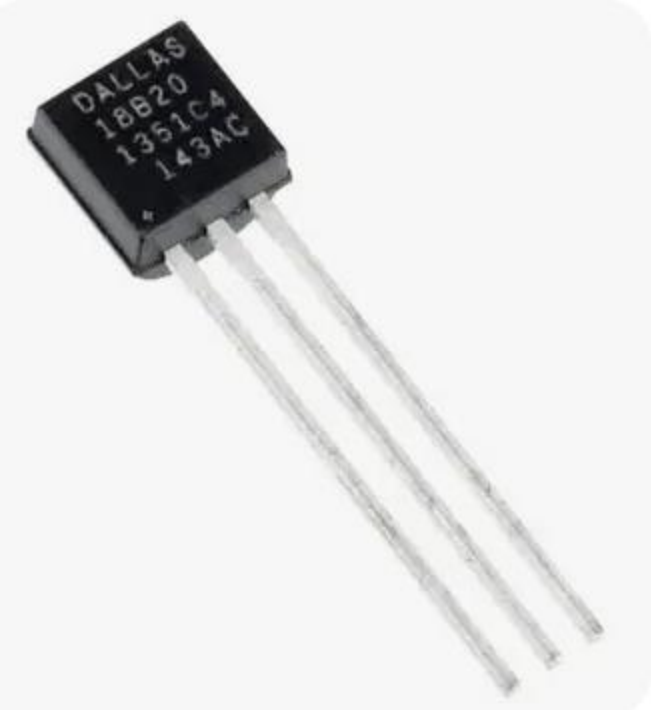

TOTAL POWER, PRICE, AND WEIGHT

- Under typical operation, my design runs at 259mW & 459mW if all LEDs are on
- The total weight of all components is about 103g.
- The sensors I selected are low power and digital, making this design more efficient than the original.
- The total price of the unit came to about $115

3D MODEL

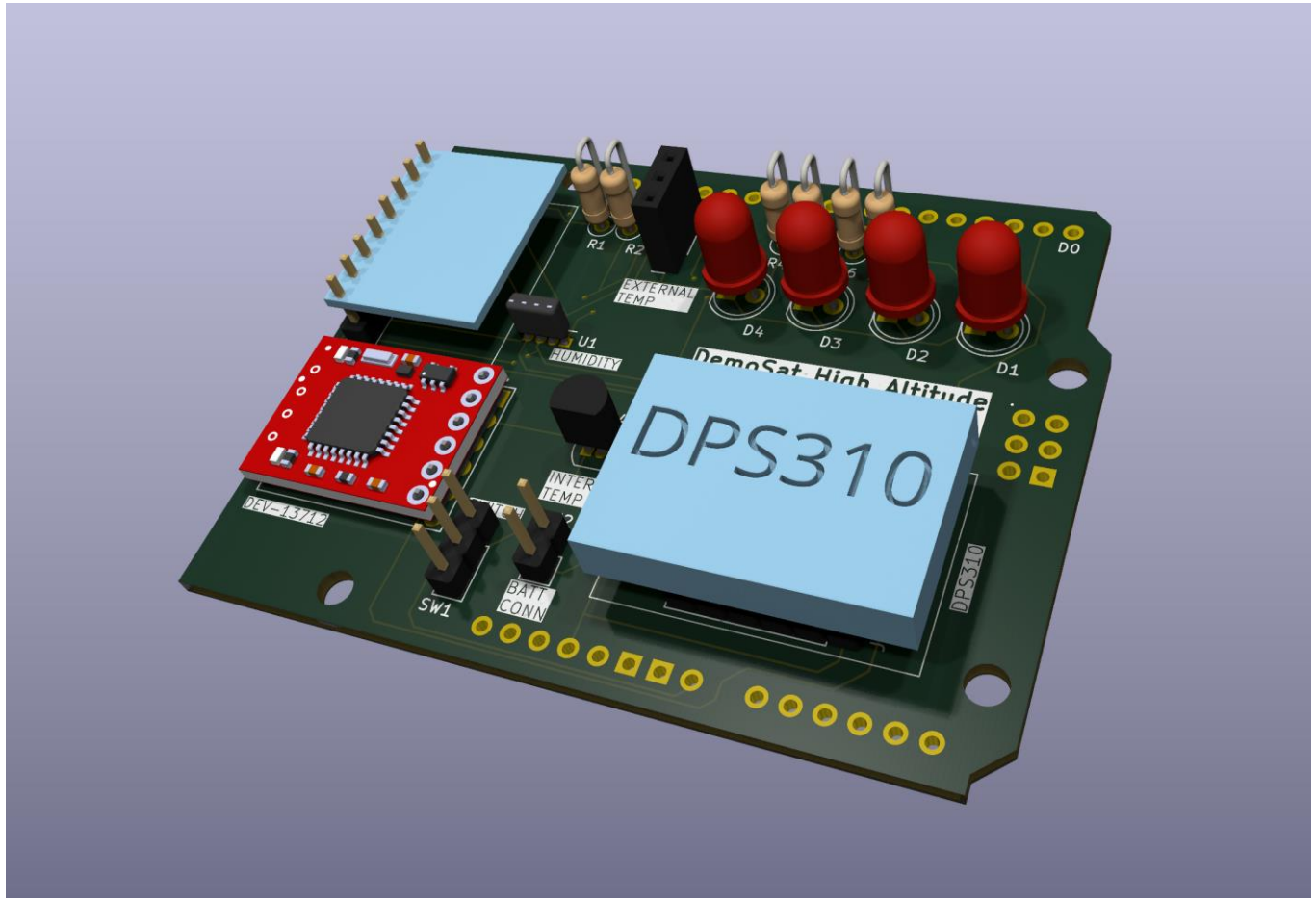
R1
R2
EXTERNAL TEMP
U1
HUMIDITY
D4
D3
D2
D1
D0
DPS310
DEV-13712
SW1
BATT CONN
DPS310

SCHEMATIC

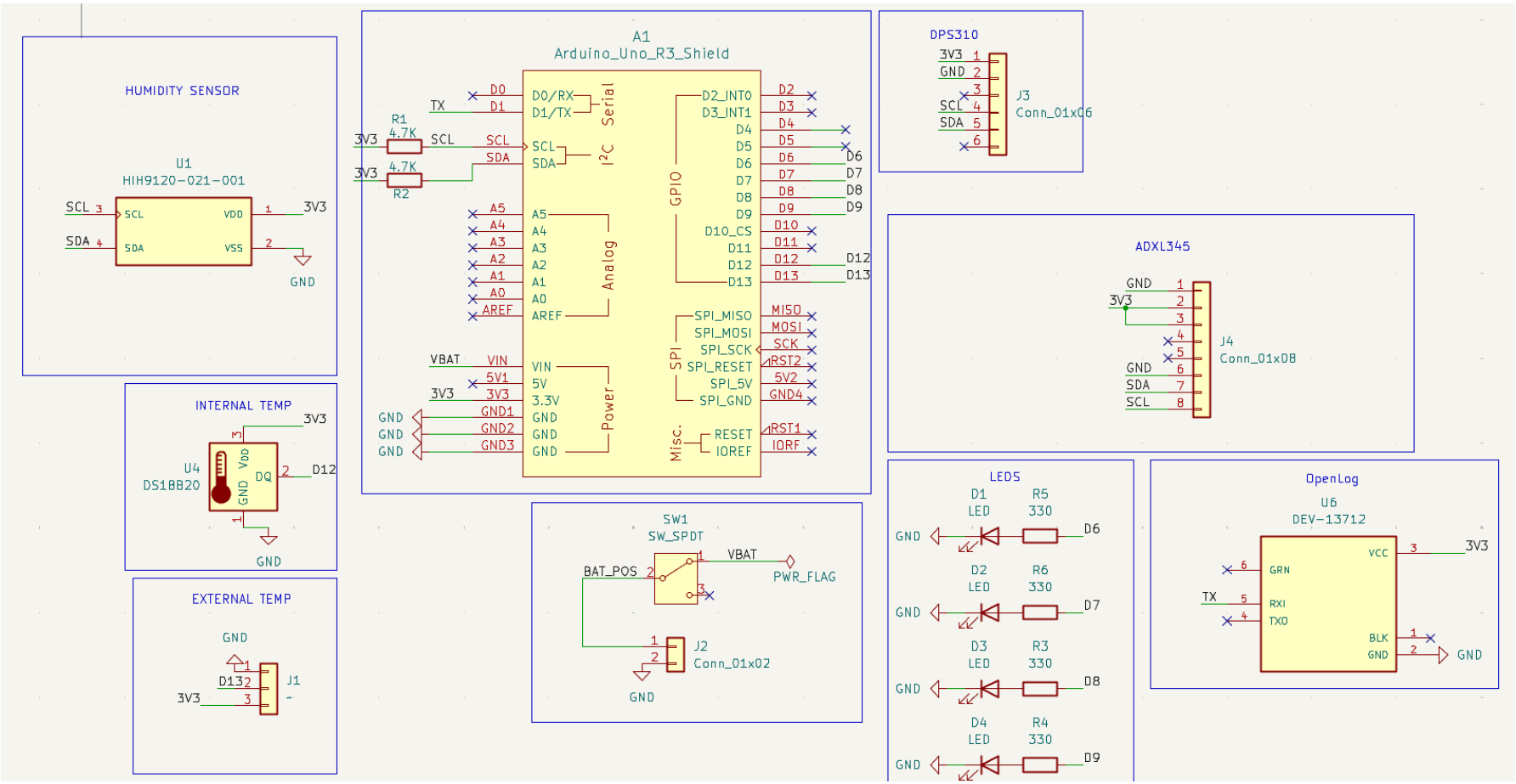
HUMIDITY SENSOR
U1
HIH9120-021-001
SCL
SDA
VDD
VSS
3V3
GND
INTERNAL TEMP
U4
DS18B20
DQ
D12
EXTERNAL TEMP
J1
A1
Arduino_Uno_R3_Shield
D0/RX
D1/TX
Serial
I2C
Analog
Power
GPIO
SPI
Misc.
R1
4.7K
R2
VIN
5V
3.3V
GND1
GND2
GND3
D2_INT0
D3_INT1
D10_CS
SPI_MISO
SPI_MOSI
SPI_SCK
SPI_RESET
SPI_5V
SPI_GND
RESET
IOREF
MISO
MOSI
SCK
RST2
5V2
GND4
RST1
IORF
DPS310
J3
Conn_01x06
ADXL345
J4
Conn_01x08
LEDS
D1
LED
R5
330
D2
R6
D3
R3
D4
R4
SW1
SW_SPDT
BAT_POS
VBAT
PWR_FLAG
J2
Conn_01x02
OpenLog
U6
DEV-13712
VCC
GRN
RXI
TXO
BLK
TX

FRONT/BACK

WE DETECTED A 2 LAYER BOARD OF 2.74 X 2.13 INCHES (69.5 X 54.0MM)
3 BOARDS WILL COST $29.05 - OSHPARK.COM

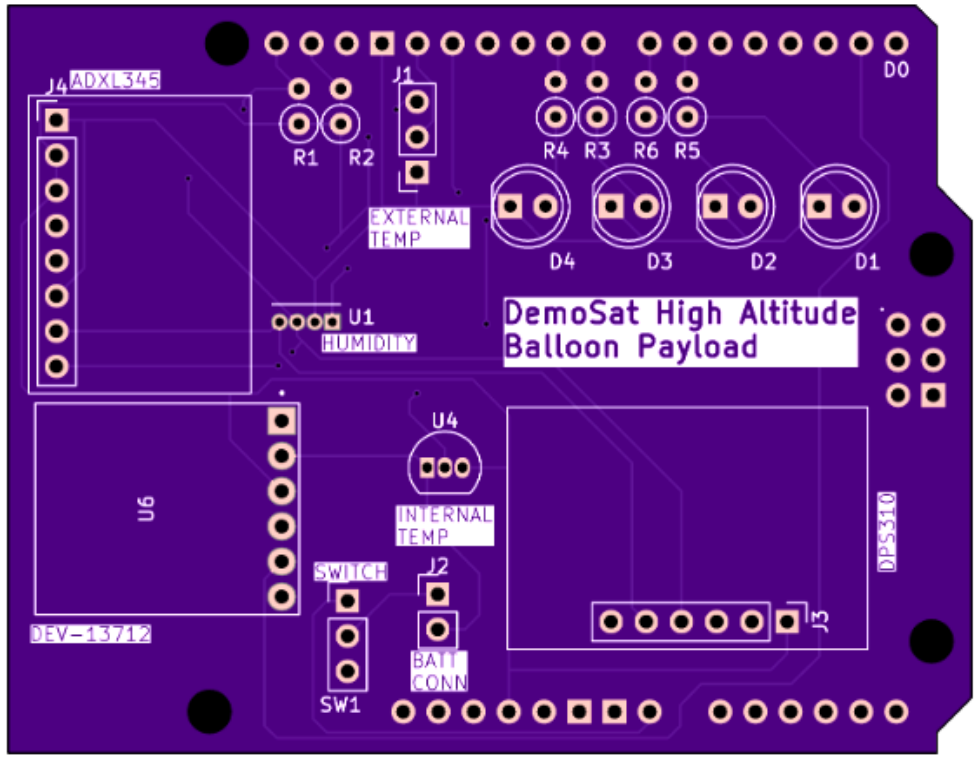

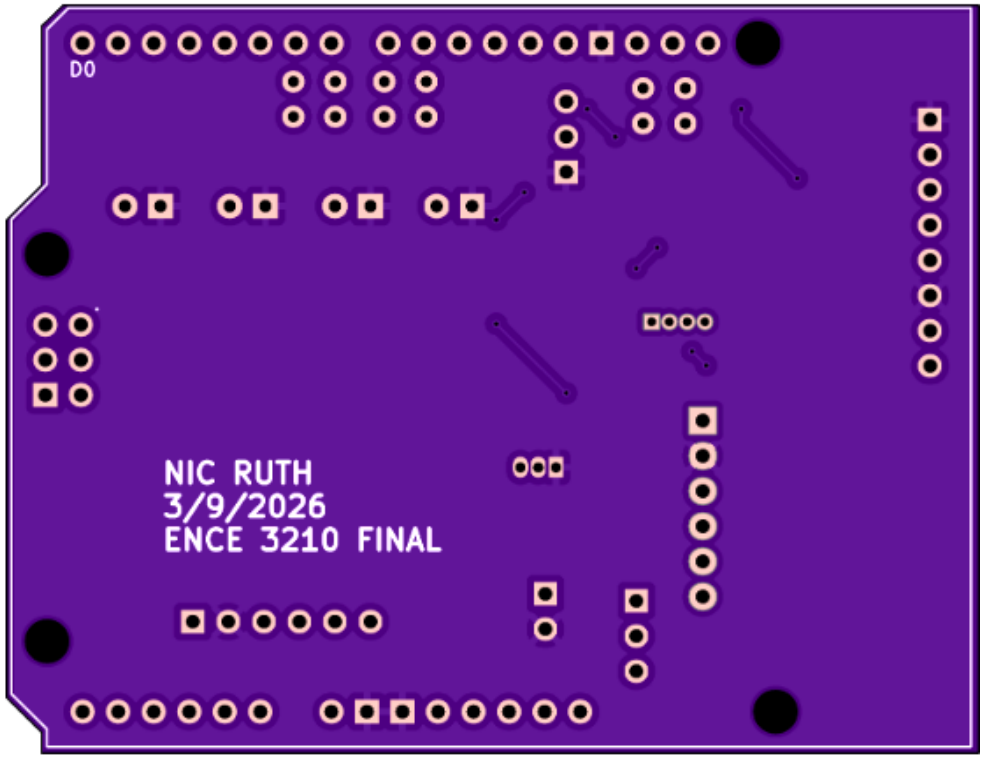

Ref lookup | Filter
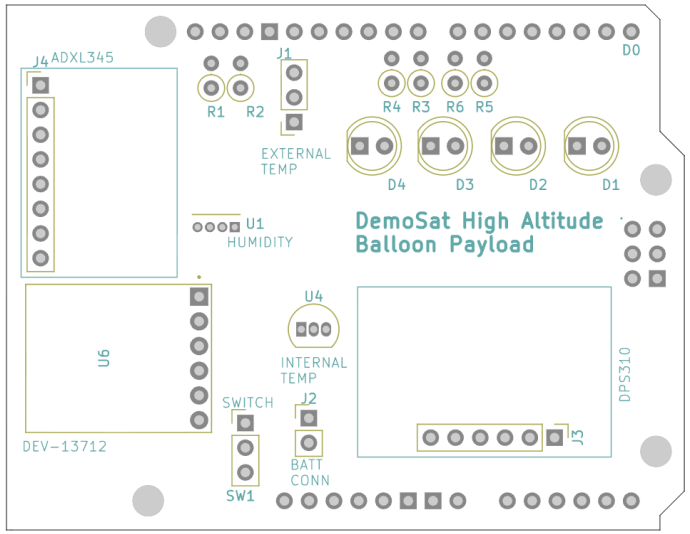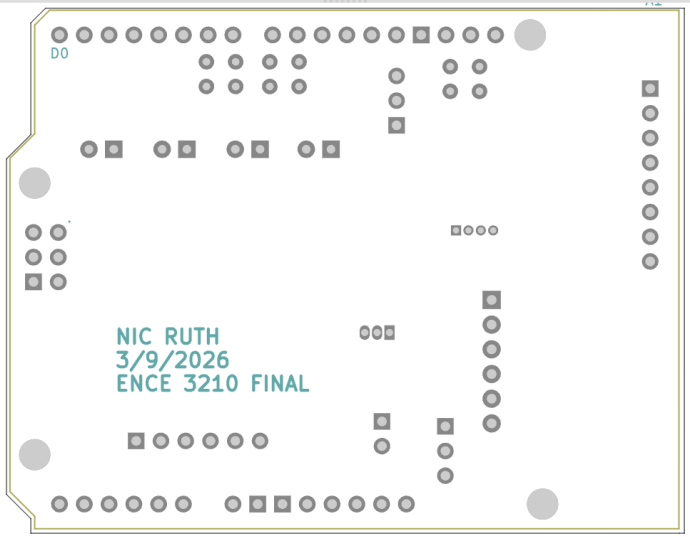
	Sourced	Placed	References	Value	Footprint	Quantity
1	☐	☐	R3, R4, R5, R6	330	R_Axial_DIN0207_L6.3mm_D2.5mm_P2.54mm_Vertical	4
2	☐	☐	R1, R2	4.7K	R_Axial_DIN0207_L6.3mm_D2.5mm_P2.54mm_Vertical	2
3	☐	☐	D1, D2, D3, D4	LED	LED_D5.0mm	4
4	☐	☐	U1	HIH9120-021-001	SIP490W381P127L190H890Q4N	1
5	☐	☐	U4	DS18B20	TO-92_Inline	1
6	☐	☐	U6	DEV-13712	MODULE_DEV-13712	1
7	☐	☐	SW1	SW_SPDT	PinHeader_1x03_P2.54mm_Vertical	1
8	☐	☐	A1	Arduino_Uno_R3_Shield	Arduino_Uno_R3_Shield	1
9	☐	☐	J1	~	PinSocket_1x03_P2.54mm_Vertical	1
10	☐	☐	J2	Conn_01x02	PinHeader_1x02_P2.54mm_Vertical	1
11	☐	☐	J3	Conn_01x06	PinHeader_1x06_P2.54mm_Vertical	1
12	☐	☐	J4	Conn_01x08	PinHeader_1x08_P2.54mm_Vertical	1